FRONT 9.0m

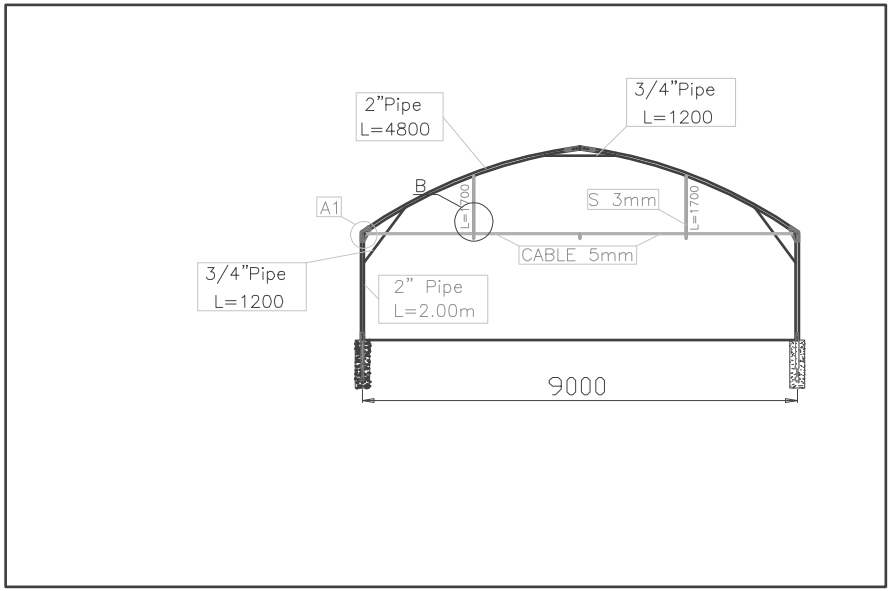
2"Pipe
L=4800
3/4"Pipe
L=1200
B
A1
L=1700
S 3mm
L=1700
CABLE 5mm
3/4"Pipe
L=1200
2" Pipe
L=2.00m
9000

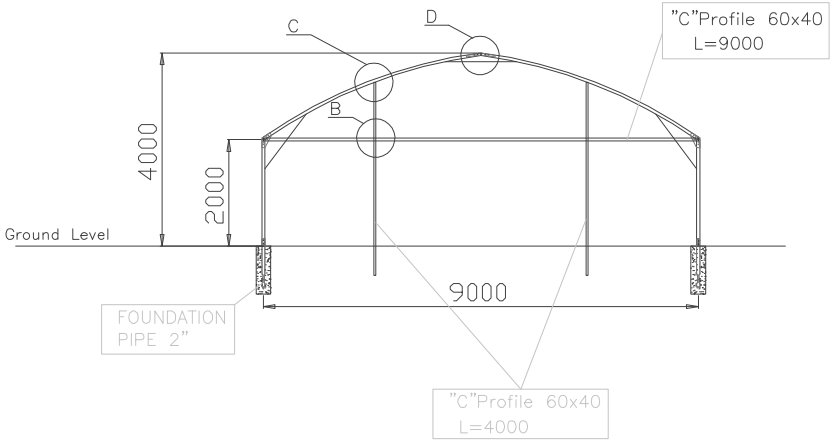
C
D
"C"Profile 60x40
L=9000
B
4000
2000
Ground Level
9000
FOUNDATION
PIPE 2"
"C"Profile 60x40
L=4000